Historical Documentation and Underwater Archaeological Reconnaissance of Salmon Creek in the Vicinity of the Batts-Duckfield-Capeheart Site, Bertie County

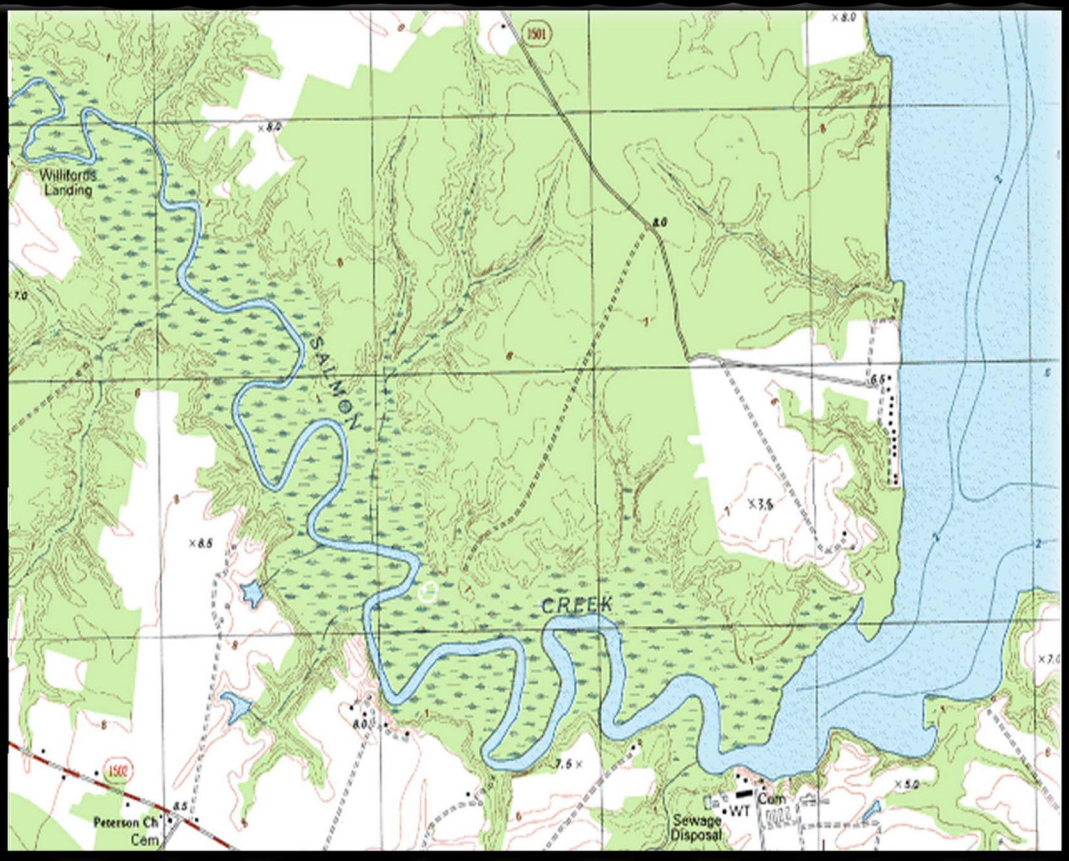

by
Michael Hill
Research Branch
and
Mark Wilde-Ramsing
Underwater Archaeology Branch

North Carolina Division of Archives and History

Historical Documentation
and
Underwater Archaeological
Reconnaissance of Salmon Creek in the Vicinity
of the Batts-Duckfield-Capeheart Site, Bertie County

Michael Hill
Research Branch

and

Mark Wilde-Ramsing
Underwater Archaeology Unit

North Carolina Division of Archives and History
March 1987

SECTION 1

The Historical Significance of
The Batts-Duckenfield-Capeheart Site, Bertie County
A Preliminary Report

The Historical Significance of The Batts-Duckenfield-Capeheart Site, Bertie County: A Preliminary Report

The tract in Bertie County lying between Salmon Creek and the mouth of the Roanoke River, facing Albemarle Sound, has been owned or inhabited since the mid-seventeenth century by some of the leading players on the stage of North Carolina history. These include: Nathaniel Batts, the earliest known permanent white settler in the province; Samuel Stephens, the first American born governor of Virginia's "Southern Plantation"; Seth Sothel, the despised, corrupt colonial governor who was banished from the colony in 1688; William Duckenfield, wealthy member of the Council and one of the leading aristocratic Englishmen in the colony in the early 1700s; and Sir Nathaniel Duckenfield, great-nephew of William, member of the Royal Council and a prominent Loyalist during the Revolution. For most of the nineteenth and twentieth centuries the site was an operating farm owned by the prominent Capeheart family. The tract's history, particularly its significance for the period of exploration and settlement and the colonial era, makes it one of the premier sites in North Carolina for archaeological investigation.

The construction of the Nathaniel Batts house in the 1650s was the culmination of several decades of exploratory ventures launched from Virginia into the Albemarle region. In 1606 King James had issued a charter to a private corporation, the Virginia Company. The following year one part of the corporation, known as the Virginia Company of London, succeeded in establishing Jamestown as the first permanent colony in the New World. In 1609 the company's charter was amended so as to include all territory northward to present-day Philadelphia and southward to the present North Carolina-South Carolina line. Over the next half-century several

exploratory surveys ventured into what is today northeastern North Carolina. The first was probably that of Marmaduke Rayner in 1620. In the spring of 1622 John Pory led an expedition into the region and soon thereafter reported that the Indians were friendly and prospects for settlement good. However, little came of his recommendations, particularly after 1624, when the Virginia Company was dissolved and the colony of Virginia came under direct control of the crown. In 1629 King Charles granted to Sir Robert Heath the territory that in time became known as Carolana, in honor of the monarch. Under Heath, plans were laid but never realized for a colony between Cape Fear and Albemarle Sound in the vicinity of present-day New Bern. Even after Heath transferred his interest in Carolana to other parties, domestic affairs in England stymied attempts at colonization.[1]

Interest in the vast frontier south of Virginia was renewed in the 1640s. Governor William Berkeley in 1646 sent an expedition, led by General Richard Bennett on land and Colonel Thomas Dew on water, against the Indians. Two years later Henry Plumpton, a veteran of the earlier expedition, and Thomas Tuke of Isle of Wight County surveyed land from the mouth of the Roanoke River up the river to the point where Weyanook Creek entered it.[2] Newspaper accounts published in London beginning in 1649 encouraged settlement in Carolana. Still, there is no evidence of occupation until the mid-1650s.[3]

Nathaniel Batts (ca. 1620-ca. 1679), generally recognized as the first permanent white settler in present North Carolina, is a rather shadowy historical figure. In the spring of 1654 Francis Yeardley, son of Virginia Governor Sir George Yeardley and a member of the House of Burgesses, reported on a visit to Carolana in late 1653 by four travelers (it is

not clear whether Yeardley himself was in the company). One of the four was Batts, whom Yeardley described as "a young man, a trader for beavers." The party visited Ralph Lane's old fort on Roanoke Island.[4]

Sometime before the middle of July, 1655 a carpenter named Robert Bodnam was twice sent southward at Yeardley's expense to build a house for Batts to live in and use as a trading base. Yeardley died in 1655 before Bodnam was paid, but the craftsman sought his money in a Norfolk County court. His petition indicated that the house was twenty feet square with two rooms and chimney.[5] A map (Attachment A) drawn by London cartographer Nicholas Comberford in 1657 clearly shows a neatly drawn structure labelled "Batts House" on the land between the Roanoke River and Salmon Creek (then Fletts) Creek. The Comberford map was probably based on a 1656 survey of the area by Colonel Thomas Dew and Captain Thomas Francis. Batts himself may have been part of the expedition.

William P. Cumming, historical geographer and expert on early maps of the southeastern United States, has argued that Batts's house would have been one of several in a settlement on the sound in the 1650s. Others have disagreed, contending that Batts's was for some time an isolated outpost.[6] At any rate it was not long before Batts had company in the Albemarle region. Between 1658 and 1661 permanent settlers moved into the area in sizeable numbers. Government organization began in 1662 when Samuel Stephens of Virginia was appointed commander of the "Southern plantation." In 1676 the neck of land between Salmon Creek and the Roanoke River was designated one of three ports of entry for Albemarle County.[7]

Batts apparently divided his time between Virginia, where he owned 900 acres, and the trading outpost in the 1650s and 1660s. It was in Virginia in 1656 that he was married to Mary Woodhouse. Their plantation in Norfolk County was known as "Roede" and later as "Batts Quarters." In 1660 Batts

not clear whether Yeardley himself was in the company). One of the four was Batts, whom Yeardley described as "a young man, a trader for beavers." The party visited Ralph Lane's old fort on Roanoke Island.[4]

Sometime before the middle of July, 1655 a carpenter named Robert Bodnam was twice sent southward at Yeardley's expense to build a house for Batts to live in and use as a trading base. Yeardley died in 1655 before Bodnam was paid, but the craftsman sought his money in a Norfolk County court. His petition indicated that the house was twenty feet square with two rooms and chimney.[5] A map (Attachment A) drawn by London cartographer Nicholas Comberford in 1657 clearly shows a neatly drawn structure labelled "Batts House" on the land between the Roanoke River and Salmon Creek (then Fletts) Creek. The Comberford map was probably based on a 1656 survey of the area by Colonel Thomas Dew and Captain Thomas Francis. Batts himself may have been part of the expedition.

William P. Cumming, historical geographer and expert on early maps of the southeastern United States, has argued that Batts's house would have been one of several in a settlement on the sound in the 1650s. Others have disagreed, contending that Batts's was for some time an isolated outpost.[6] At any rate it was not long before Batts had company in the Albemarle region. Between 1658 and 1661 permanent settlers moved into the area in sizeable numbers. Government organization began in 1662 when Samuel Stephens of Virginia was appointed commander of the "Southern plantation." In 1676 the neck of land between Salmon Creek and the Roanoke River was designated one of three ports of entry for Albemarle County.[7]

Batts apparently divided his time between Virginia, where he owned 900 acres, and the trading outpost in the 1650s and 1660s. It was in Virginia in 1656 that he was married to Mary Woodhouse. Their plantation in Norfolk County was known as "Roede" and later as "Batts Quarters." In 1660 Batts

did purchase land on Virginia's southern frontier from Kiscutanewh, king of the Yeopim Indians. The deed, the first recorded transaction for land within the present bounds of North Carolina, was for property near the mouth of the Yeopim River. Batts in time purchased Heriots Island (later known as Batts Island) at the mouth of the Yeopim in Albemarle Sound.[8]

However, Batts apparently kept the trading post built by Bodnam until at least 1672. In November and December of that year George Fox, a Quaker missionary, visited Batts, whom he described as formerly "governor of Roanoak." Fox's reference to such an appointment is mysterious since there is no record of administrative organization of any sort by 1672. Some interpreters, notably Cumming, have taken the reference as evidence of a sizable settlement in the area from an early date. Fox further noted that Batts "hath been a Rude, desperate man." His use of the past tense seems to indicate that Batts had reformed himself before Fox's visit.[9] There is no written record of Batts after 1672. Apparently he moved to and died upon Batts Island (also called Batts Grave in later years) around 1679.

Five proprietory governors lived within the bounds of Chowan precinct (Bertie County was formed from Chowan in 1722): Seth Sothel, Thomas Pollock, Edward Hyde, Charles Eden, and Gabriel Johnston all lived on or near Salmon Creek. Sothel lived and presumably was buried somewhere on the plantation later known as "Duckenfield" and still later as "Avoca."[10] Sothel's political career was a remarkable one, sketched here only in outline. He was commissioned governor of Albemarle County by the Lords Proprietors in 1678 but, following capture by pirates, did not begin serving in the office until 1683. Owing to his tyrannical abuses of power, Sothel was banished from Albemarle in 1688. He made his way to Charleston but eventually returned to the Albemarle region where he died in 1694.[11]

In 1684 Sothel received a grant for 4,000 acres in Chowan precinct,

formerly belonging to Samuel Stephens:

> ... all the plantation and tract of land lately Mr. Samuel Stephens lying between the northwest side of Salmon Creek and the bay of Moratick southwest and butting upon the Sound east and Cashoke Creek southwest and from thence in direct line to the head of aforesaid Salmon Creek north ...

The vast tract presumably included the site of the Batts house. Since Sothel was not entirely trusted, he was careful to assemble numerous witnesses to the 1684 transaction. One of the signers of the document was William Duckenfield, a friend of Sothel and later owner of the large tract.[12] Sothel took up residence on his Salmon Creek plantation around 1685 and remained there until his banishment in 1688. Eventually he made his way back from Charleston, returned to the plantation, and died and was buried thereupon in 1694.[13]

No sign of Sothel's home or grave has ever been found. However, there are references to the latter in the documents relative to the settlement of his estate. Duckenfield received from Sothel's widow Anna rights to practically all of her late husband's property. In 1695 he was ordered to round up and hold the livestock on the Salmon Creek plantation. The following year he took possession of Sothel's slaves. Finally, in 1697 he acquired the entire 4,000-acre plantation. In that same year Duckenfield was sued by the estate of John Lear, whom Anna Sothel had married after her first husband's death, for failure to erect a "toome stone" as he had promised on the grave of the former governor. Some clue as to where the grave might have been located may be found in the fact that a feature on Salmon Creek in a plat prepared for one of Duckenfield's heirs in 1767 is labelled "Tombstone Land[in]'g" (see Attachment B).[14]

William Duckenfield (1645?-1721) (numerous variant spellings: Dukingfield, Duckingfield, etc.) was among the leading aristocratic Englishmen in

colonial North Carolina and the first of three generations of the family to own what became known as Duckenfield plantation. He apparently emigrated in the 1670s from Chester, Cheshire County, England, where his family wielded considerable influence. Duckenfield kept a home on the Little River as late as 1695 but evidently built on Salmon Creek sometime after 1697.[15] His purchase of three kilns of brick, a quantity of oyster shells (for mortar), and 1,800 feet of plank in 1700 was probably related to construction of a house or some other improvement to the Salmon Creek plantation. At the earlier house site on Little River, described by Duckenfield as "my plantation at ye Logg house," he had considerable problems with vandalism. In 1694 he complained to Governor John Archdale that "the indyan's play the Roge with Me they have almost Kild all my hoggs." On another occasion a man was brought to court for stealing a gun and tomahawk from Duckenfield's house; his punishment was thirty-nine stripes on his bare back.[16]

As early as 1684 Duckenfield was a member of the governor's Council, a position he held until his death in 1721. On several occasions the council met at Duckenfield's house. In 1710, according to a contemporary report, Edward Hyde stayed overnight at the "plantation belonging to a good old English nobleman, whose name was Duckenfield, where he found pretty good lodgings."[17] A few years earlier Duckenfield, then well along in years, had attempted to transfer ownership of the estate to his "kinsman" (son-in-law?) John Arderne. The papers, as drawn up in 1707, indicated that he owned twenty-three slaves, some of them Indians. However, Arderne never came up with the money and the estate reverted to Duckenfield. By the terms of his will Duckinfield left cash and personal items to cousins and friends, but entrusted the bulk of his estate to Nathaniel, son of his brother Sir Robert Duckenfield.

Nathaniel Duckenfield (? - 1749), as well as his son and namesake, was more British than American, it seems safe to say. Each of them lived in North Carolina for only brief periods. The elder Nathaniel was apparently residing in Chowan precinct in 1719 when William conveyed to him all rights to manors or lordships in the County of Cheshire, England. However, it seems likely that he returned to Great Britain shortly after the death of his uncle. In 1723 Nathaniel Duckenfield appointed Hercules Coyte as overseer of the North Carolina estate, naming seven slaves who should be used to raise silk "if the same can be Raised on said Plantation." He further instructed Coyte to "Raise pork Corn pitch Tarr Oyle potashe and whatever else" he might judge profitable. Duckenfield specifically requested that attention be given to repair of buildings and sheds and that manure be spread over the cultivated lands.[19]

Upon his death in 1749 Nathaniel Duckenfield bequeathed the estate to his wife Margaret. She appeared in Bertie County court in 1756 to qualify as executrix. According to an inventory drawn up at that time, Duckenfield owned twenty slaves, sixty cows, one hundred hogs, other livestock, and various utensils and tools. Shortly thereafter Margaret Duckenfield married a lawyer named John Pearson and settled on the Bertie estate.[20] A Pearson residence is indicated on the 1767 plat (Attachment B).

Sir Nathaniel Duckenfield, Baronet (1747-20 October 1824), as he came to be known, did not accompany his mother to America. He acquired his title in 1769 when his uncle Samuel died without issue. The following year the "rollicking young baronet" made his first visit to North Carolina where he courted Hannah, sister of Samuel Johnston. She in time rejected him and married James Iredell. Still, Duckenfield remained friends with Iredell and regularly corresponded with him through the 1780s. The baronet was said

to be "very fond of smutty jokes," thus rendering many of his letters unfit for publication.[21]

Governor William Tryon in 1771 appointed the nobleman to the Royal Council. Duckenfield attempted to claim a senior position on the council by virtue of his baronetcy. The other councillors expressed their "astonishment" and quickly thwarted his plans. Duckenfield left North Carolina in the spring of 1772 and resigned his council seat in 1773. Back in England he purchased a cornet's commission in the Queens Dragoons. Although he rose to adjutant in his regiment, he vowed that he would not serve in America during the Revolution.[22]

In 1778 Duckenfield's North Carolina lands were seized by the state, the appeals by Margaret Pearson and James Iredell on his behalf notwithstanding. Former Loyalist lands in twenty-one counties were sold between 1784 and 1787. The state realized a greater return on Duckenfield's Bertie lands than on property seized from any other single individual (with the exception of Lord Granville). Although Duckenfield's 6,842 acres were only a fraction of Henry McCullock's 60,000 acres, they were located in a more populated area and thus brought higher prices, totalling £31,445. In his claim for compensation to the British government, Duckenfield asked for £8,762 but received only one-third of that amount.[23]

As proof of his claim Duckenfield produced a plat of his Bertie lands prepared by William Churton in 1767 (Attachment B). Churton, among the best surveyors in colonial North Carolina, drew a large, detailed map showing water courses, land uses, residences, and a shipyard on the south bank of Salmon Creek.[24] Duckenfield also filed a written statement in which he described the estate as it existed in 1772, the last year of his stay in North Carolina. "There was no better estate in that part of the Country," he wrote. About 300 acres were cultivated in corn and tobacco; the rest

were wooded. "There was a good Barn on the Land," Duckenfield indicated, "[and] a very valuable Ferry as an appendage to it." Duckenfield continued:

> There were two small brick houses about twenty-four by twenty-six. They were intended as Wings for a larger House which was designed to have been built...

In 1774 Duckenfield said he received word from Mr. Dawson that "all the Buildings had been blown down except the Brick ones."[25] The only guide we have to where the structures might have been located is the 1767 plat. However, the two brick buildings in place in 1772 were probably built after 1767 and thus do not appear on Churton's drawing.

The Duckenfield lands were divided among eighteen different owners after 1787. Among the buyers were Jonathan Jacocks and William Lockhart, both shown as owners of adjacent tracts on the 1767 plat. Members of the Jacocks and Lockhart families are believed to have been primary owners until about 1829, when the plantation came to be owned by the Capehearts. George W. Capeheart, builder of the major Bertie plantation house Scotch Hall (1838), Cullen Capeheart, and their heirs (Dr. W. R. Capeheart and his sisters were the owners in 1901) held what they called "Avoca" well into the twentieth century, when it was sold to R. J. Reynolds Tobacco Company.[26]

More intensive documentary research should yield further valuable details on the Batts-Duckenfield-Capeheart site. A search of Virginia records might reveal more about Nathaniel Batts. More light could be shed on Samuel Stephens, Seth Sothel, and the Salmon Creek plantation. Certainly much more could be learned about the three Duckenfield generations. Finally, the most pressing need is for more information, including a chain of title, on the post-1787 period. Virtually no research has been done on the years of Capeheart ownership. Answers to questions about the Avoca plantation, with particular attention to land use and the placement of structures, will be important to interpretation of the site.

Notes

[1]William S. Powell, "Carolana and the Incomparable Roanoke: Exploration and Attempted Settlements, 1620-1663," North Carolina Historical Review, LI, no. 1 (January, 1974), pp. 1-10, hereinafter cited as Powell, "Carolana"; Lindley S. Butler, "The Early Settlement of Carolina: Virginia's Southern Frontier," Virginia Magazine of History and Biography, LXXIX, no. 1 (January, 1971), pp. 20-28, hereinafter cited as Butler, "Early Settlement."

[2]William L. Saunders (ed.), The Colonial Records of North Carolina (Raleigh: State of North Carolina, 1886), I, p. 676, hereinafter cited as Saunders (ed.), Colonial Records; Powell, "Carolana," p. 10.

[3]Hugh T. Lefler, "A Description of Carolana by a Well-Willer, 1649," North Carolina Historical Review, XXXII, no. 1 (January, 1955), pp. 102-105.

[4]Powell, "Carolana," p. 11; on Batts, see Elizabeth G. McPherson (ed.), "Nathaniell Batts, Landholder on Pasquotank River, 1660," North Carolina Historical Review, XLIII, no. 1 (January, 1966), pp. 66-81, hereinafter cited as McPherson (ed.), "Batts"; and William S. Powell (ed.), The Dictionary of North Carolina Biography (Chapel Hill: University of North Carolina Press, 1979), I, p. 119, hereinafter cited as Powell (ed.), Dictionary.

[5]Norfolk County Deed Book D, p. 293, cited in McPherson (ed.), "Batts," p. 74. Mrs. McPherson noted, in reference to her research on Batts:

> The newly discovered documents reveal additional information on Batts and the early history of North Carolina and Virginia. The fact that these records have been unknown to historians through the years gives hope that other surviving records relating to the early history of North Carolina may be found....

[6]William P. Cumming, "The Earliest Permanent Settlement in Carolina: Nathaniel Batts and the Comberford Map," American Historical Review, XLV, no. 1 (October, 1939), p. 85, hereinafter cited as Cumming, "Earliest Settlement." For the opposite view, see Butler, "Early Settlement," pp. 24-25, and Herbert R. Paschal, Jr., "A State in Search of a Birthday," The Rebel, III, no. 3 (Spring 1961), pp. 11-14.

[7]Saunders (ed.), Colonial Records, I, p. 229. The two other areas designated as "the only places where the Shipps shall lade and unlade" were on Roanoke Island ("Chief Towne") and on Durant's Neck (the west side of the mouth of Little River).

[8]McPherson (ed.), "Batts," p. 75.

[9]Cumming, "Earliest Settlement," p. 87.

[10]John E. Tyler, Bertie County's Colonial and State Governors of North Carolina (unpublished typescript copy in the North Carolina State Archives, 1950), hereinafter cited as Tyler, Governors.

[11]Beth Crabtree, North Carolina Governors, 1585-1975 (Raleigh: Division of Archives and History, 1974), pp. 12-13.

[12]Mattie Erma Edwards Parker (ed.), North Carolina Higher-Court Records, 1670-1696 (Raleigh: Department of Archives and History, 1968), lxxxii, hereinafter cited as Parker (ed.), Higher-Court Records, 1670-1696; Albemarle County Land Warrants and Surveys, North Carolina State Archives.

[13]Tyler, Governors, [n.p.].

[14]Parker (ed.), Higher-Court Records, 1670-1696, pp. 208, 282; Mattie Erma Edwards Parker (ed.), North Carolina Higher-Court Records, 1697-1701 (Raleigh: Department of Archives and History, 1971), p. 25, hereinafter cited as Parker (ed.), Higher-Court Records, 1697-1701.

[15]Parker (ed.), Higher-Court Records, 1670-1696, p. 246.

[16]J.R.B. Hathaway (ed.), North Carolina Historical and Genealogical Register (Edenton: author, 1903), III, p. 64, hereinafter cited as Hathaway's Register; Parker (ed.), Higher-Court Records, 1691-1701, pp. 91, 411.

[17]Saunders (ed.), Colonial Records, I, p. 915.

[18]Hathaway's Register, I, p. 41, and II, p. 455; J. Bryan Grimes (comp.), Abstracts of North Carolina Wills (Raleigh: Edwards and Broughton, 1910), p. 103.

[19]Robert J. Cain (ed.), Records of the Executive Council, 1664-1734 (Raleigh: Division of Archives and History, 1984), pp. 535-536.

[20]Bertie County Estates Records, Nathaniel Duckenfield folder, North Carolina State Archives; William S. Price, Jr., "Sir Nathaniel Dukinfield," unpublished sketch prepared for The Dictionary of North Carolina Biography (copy in possession of the author), hereinafter cited as Price, "Dukinfield."

[21]Price, "Dukinfield"; Don Higginbotham (ed.), The Papers of James Iredell (Raleigh: Division of Archives and History, 1976), I, xxxii.

[22]William S. Powell (ed.), The Correspondence of William Tryon and Other Selected Papers (Raleigh: Division of Archives and History, 1981), II, pp. 596, 633, 783; Price, "Dukinfield."

[23]Robert O. DeMond, The Loyalists in North Carolina During the Revolution (Durham: Duke University Press, 1940), pp. 174, 241 ff., 254.

[24]The shipyard site has apparently been indentified. Writing in 1958, William P. Cumming observed that "recently members of the Bertie County Historical Association have found in the vicinity the large iron cauldron used in pitching the vessels." Cumming, The Southeast in Early Maps (Princeton, N.J.: Princeton University Press, 1958), p. 238; see also Charles Christopher Crittenden, "Ships and Shipping in North Carolina, 1763-1789," North Carolina Historical Review, VIII, no. 1 (January, 1931), p. 7.

[25]Loyalist Claim, Audit Office, English Records, North Carolina State Archives.

[26]Bill Sharpe, A New Geography of North Carolina (Raleigh: Sharpe Publishing Co., 1965), IV, p. 1734; Hathaway's Register, II, p. 455. The name for the plantation is said to have its origin in the phrase "sweet vale of Avoca" from Thomas Moore's poem "The Meeting of the Waters." William S. Powell, The North Carolina Gazetteer (Chapel Hill: University of North Carolina Press, 1968), p. 16.

SELECTED BIBLIOGRAPHY

Butler, Lindley S. "The Early Settlement of Carolina: Virginia's Southern Frontier." Virginia Magazine of History and Biography, LXXIX, no. 1 (January, 1971), 20-28.

Cain, Robert J.; Parker, Mattie Erma Edwards; and Price, William S., Jr., eds. North Carolina Higher-Court Records, 1670-1708 (3 volumes); North Carolina Higher Court Minutes, 1709-1730 (2 volumes); and Records of the Executive Council, 1664-1734, volumes II - VII of projected multivolume series, The Colonial Records of North Carolina (second series). Raleigh: Division of Archives and History, 1968- .

Clark, Walter, ed. The State Records of North Carolina. 16 volumes, numbered XI-XXVI. Winston and Goldsboro: State of North Carolina, 1895-1907.

Corbitt, David Lee. The Formation of the North Carolina Counties, 1663-1943. Raleigh: Department of Archives and History, 1950.

Crabtree, Beth. North Carolina Governors, 1585-1975. Raleigh: Division of Archives and History, 1974.

Crittenden, Charles Christopher. "Ships and Shipping in North Carolina, 1763-1789." North Carolina Historical Review, VIII, no. 1 (January, 1931), 1-13.

Cumming, William P. "The Earliest Permanent Settlement in Carolina: Nathaniel Batts and the Comberford Map." American Historical Review, XLV, no. 1 (October, 1939), 82-89.

_____. The Southeast in Early Maps. Princeton, N. J.: Princeton University Press, 1958.

DeMond, Robert O. The Loyalists in North Carolina During the Revolution. Durham: Duke University Press, 1940.

[Fox, George]. Journal of George Fox. 2 volumes. London: Friends' Tract Association, 1891.

Grimes, J. Bryan, comp. Abstracts of North Carolina Wills. Raleigh: Edwards and Broughton, 1910.

Higginbotham, Don. The Papers of James Iredell. 2 volumes. Raleigh: Division of Archives and History, 1976.

Lefler, Hugh T. "A Description of Carolana by a Well-Willer, 1649." North Carolina Historical Review, XXXII, no. 1 (January, 1955), 102-105.

McPherson, Elizabeth G., ed. "Nathaniell Batts, Landholder on Pasquotank River, 1660." North Carolina Historical Review, XLIII, no. 1 (January, 1966), 66-81.

Norfolk County (Virginia) Courthouse, Chesapeake, Virginia. Norfolk County Deed Books and Court Minutes.

North Carolina Division of Archives and History, Raleigh, North Carolina.
Research Branch files
Survey and Planning, Archaeology and Historic Preservation Section, files

North Carolina Historical and Genealogical Register. 3 volumes, edited by J.R.B. Hathaway. Edenton: published by the author, 1900-1903.

North Carolina State Archives, Raleigh, North Carolina.
Albemarle County Land Warrants and Surveys and Miscellaneous Records
Bertie County Court Minutes, Estates Records, Tax Records, Wills, and Miscellaneous Records
English Records. Audit Office. Loyalist Claims
Map collection

Nugent, Nell Marion, comp. Cavaliers and Pioneers: Abstracts of Virginia Land Patents and Grants, 1623-1800. Richmond: Dietz Printing Co., 1934.

Paschal, Herbert Richard, Jr. "A State in Search of a Birthday." The Rebel, III, no. 3 (Spring, 1961), 11-14.

Powell, William S. "Carolana and the Incomparable Roanoke: Exploration and Attempted Settlements, 1620-1663." North Carolina Historical Review, LI, no. 1 (January, 1974), 1-21.

_____, ed. The Correspondence of William Tryon and Other Selected Papers. 2 volumes. Raleigh: Division of Archives and History, 1981.

_____, ed. The Dictionary of North Carolina Biography. Volume I of projected multivolume series. Chapel Hill: University of North Carolina Press, 1979- .

_____. The North Carolina Gazetteer. Chapel Hill: University of North Carolina Press, 1968.

Price, William S., Jr. "Dukinfield, Sir Nathaniel." Unpublished biographical sketch prepared for The Dictionary of North Carolina Biography (copy in possession of the author).

_____. "'Men of Good Estates': Wealth Among North Carolina's Royal Councillors." North Carolina Historical Review, XLIX, no. 1 (January, 1972), 72-82.

Saunders, William L., ed. The Colonial Records of North Carolina. 10 volumes. Raleigh: State of North Carolina, 1886-1890.

Sharpe, Bill. A New Geography of North Carolina. 4 volumes. Raleigh: Sharpe Publishing Co., 1954-1965.

Tyler, John E. Bertie County's Colonial and State Governors of North Carolina. Unpublished typescript copy in the North Carolina State Archives, 1950.

Watson, Alan D. Bertie County: A Brief History. Raleigh: Division of Archives and History, 1982.

SECTION 2

Underwater Reconnaissance of Salmon Creek

in the

Vicinity of the Bath-Duckenfield-Capeheart Site, Bertie County

Underwater Reconnaissance of Salmon Creek
in the
Vicinity of the Bath-Duckfield-Capeheart Site, Bertie County

Richard Lawrence, Leslie Bright and Mark Wilde-Ramsing of the Underwater Archaeology Unit along with Dr. William Sleight traveled to the Chowan and Salmon Rivers area on May 12, 13 and 14, 1986. After meeting Bill Oliver, Archaeology Branch, we headed to Avoca Farms, a farming operation run by R.J. Reynolds, which is based on the south side of Salmon Creek near its mouth (Figure 1). We met Mr. Mallory, truck superintendent, who showed us the Avoca facilities including a small boat landing.

Due to the malfunctioning of the magnetometer, we had to rely primarily on SCUBA swim searches directed by historical research and local informants. The latter was provided by T. Bud Smythwick, P.O. Box 123, Merry Hill, North Carolina, 27957, who is a lifetime resident of the area and has spent considerable recreational time on Salmon Creek.

Based on the findings of Michael HIll, Research Branch, our primary search area concentrated on the south bank of Salmon Creek from Tombstone Landing to Wiley's Landing. A slow SCUBA inspection was made randomly covering the creek bottom between the shoreline and fifty yards out. A number of sites, both vessel remains and landing debris, were located and investigated. A second strategy entailed riding in the boat up Salmon Creek to Willifords Landing and diving at places where high ground was adjacent to the creek. Again vessel remains and landing debris were recorded. Finally, based on

Figure 1
Areas Surveyed in
Salmon Creek

Mr. Smythwick's information we examined the southern shoreline of the Albemarle Sound near the mouth of Salmon Creek and several other spots in Salmon Creek where he remembered vessel remains or landings.

Although we did not have the use of the magnetometer, thirteen sumberged archaeological sites were examined (Figures 2, 3 and 4). The time range of material seemed to span over two centuries, although, as to be expected, more recent remains were the most abundant. Salmon Creek has the potential to provide a great deal of maritime information through its submerged archaeological remains as evidenced by historical research and this brief underwater investigation.

The findings of our visit to Salmon Creek are discussed below, site by site. They have been grouped into vessels or landings.

VESSEL REMAINS

Avoca flat boat, 0001SAR - This boat is located in three feet of water on a sand bottom covered with a few inches of light sediment. The vessel's sides and bottom are intact and although its deck planks have been dislodged, many of them lie on the site and are available for reconstruction (Figure 5, photos 1 and 2).

Wreck Facts

Hull - rectangular; wood with raked and curved bow and stern.

Length - 24', beam - 7'7", depth of hold - 16".

2 longitudinal bulkheads, 16" by 1', 2 chine boards, 3" by 2½" with notches to accept frames, 3" by 3/4", which were on approximately 2' centers.

Floorboards 3" by 5" ran athwartship and coincide with frames; bulkheads notched to allow floors to pass under: Planks 5" by 1"; latitudinal. Fastenings - ferrous material (deterioration prevented positive identification).

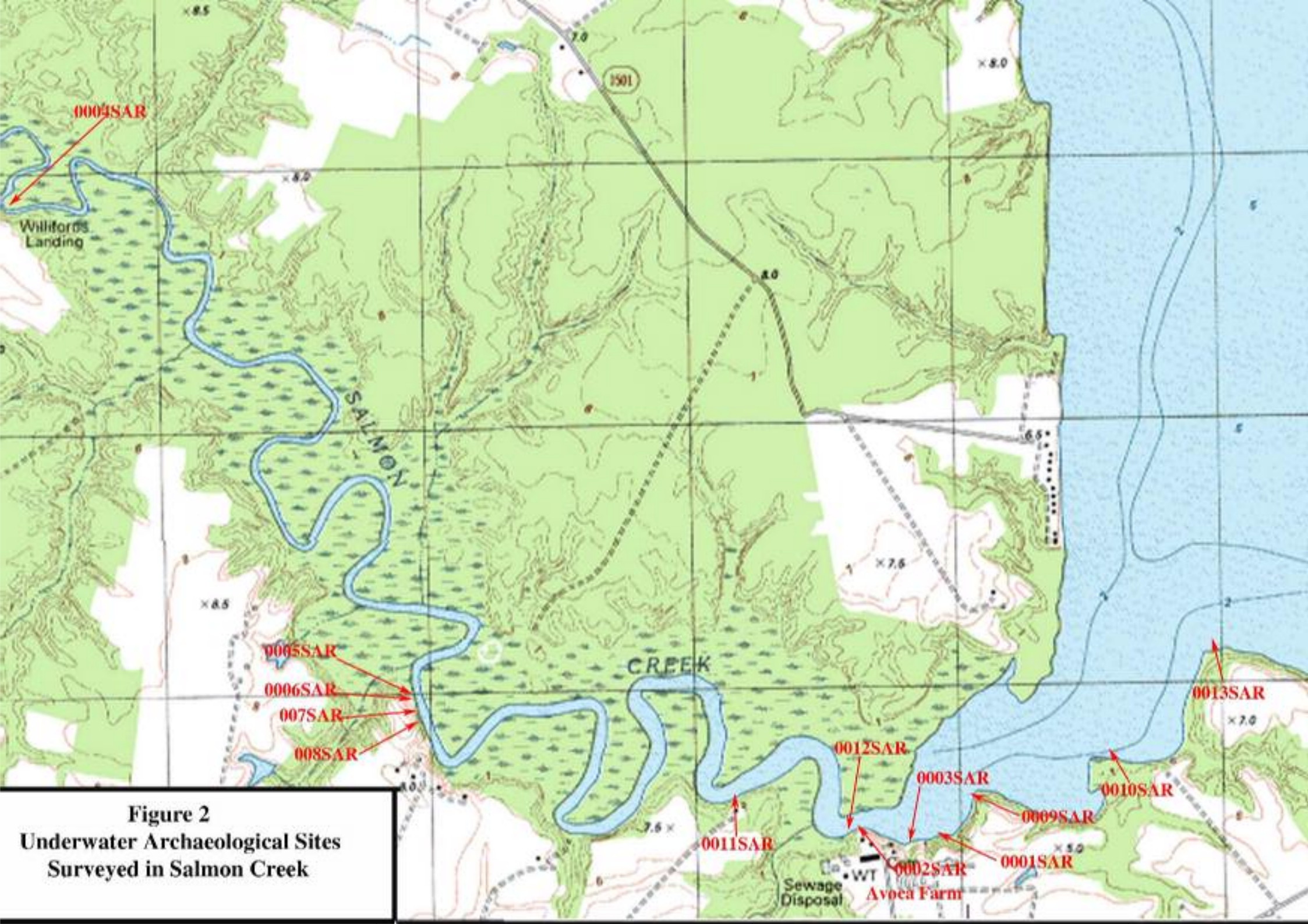

Figure 2
Underwater Archaeological Sites Surveyed in Salmon Creek

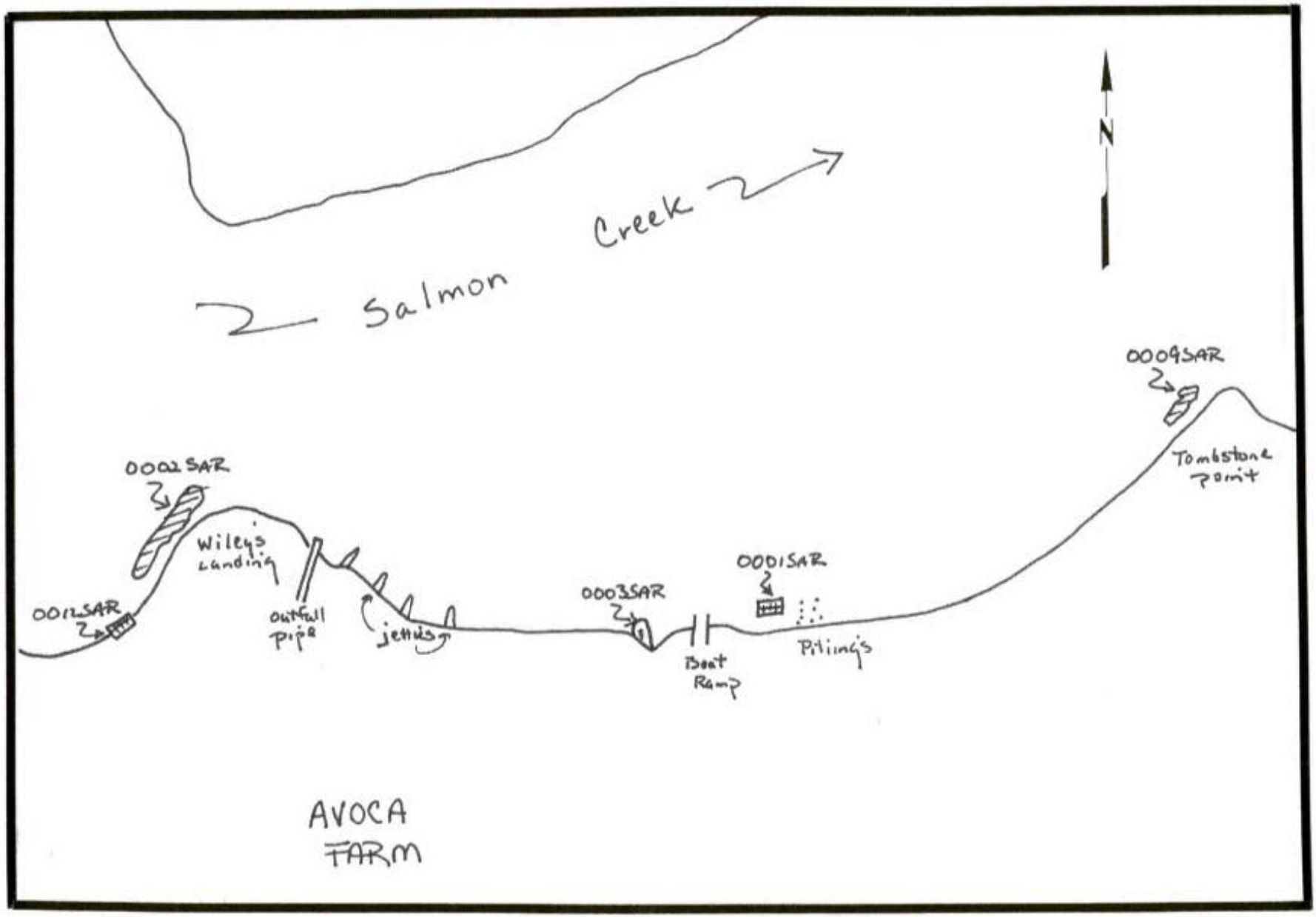

Figure 3. Sketch of Salmon Creek in the Avoca Farms Vicinity
MWR 5/14/86

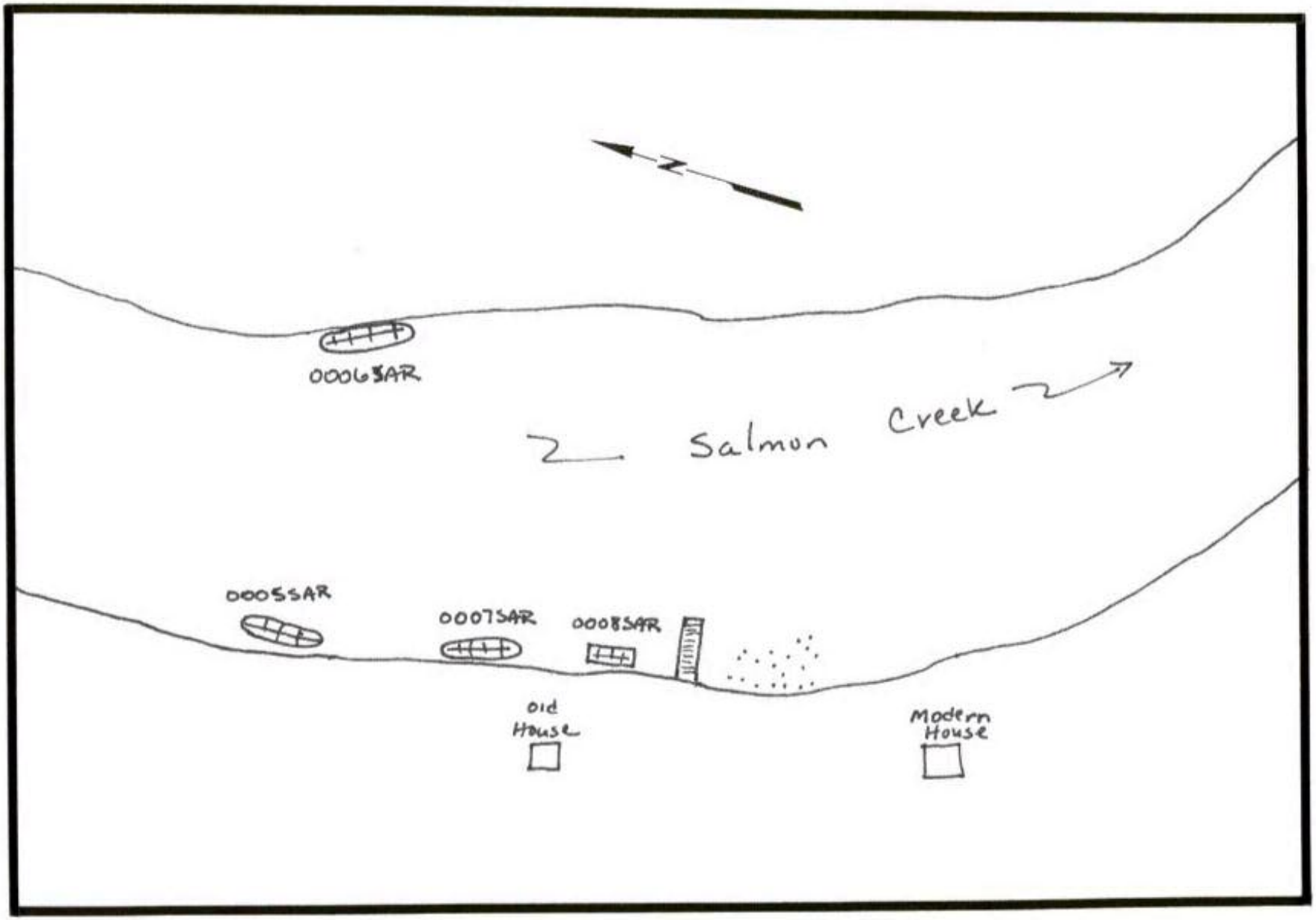

Figure 4. Sketch of Salmon Creek at Willis Landing
MWR 5/14/86

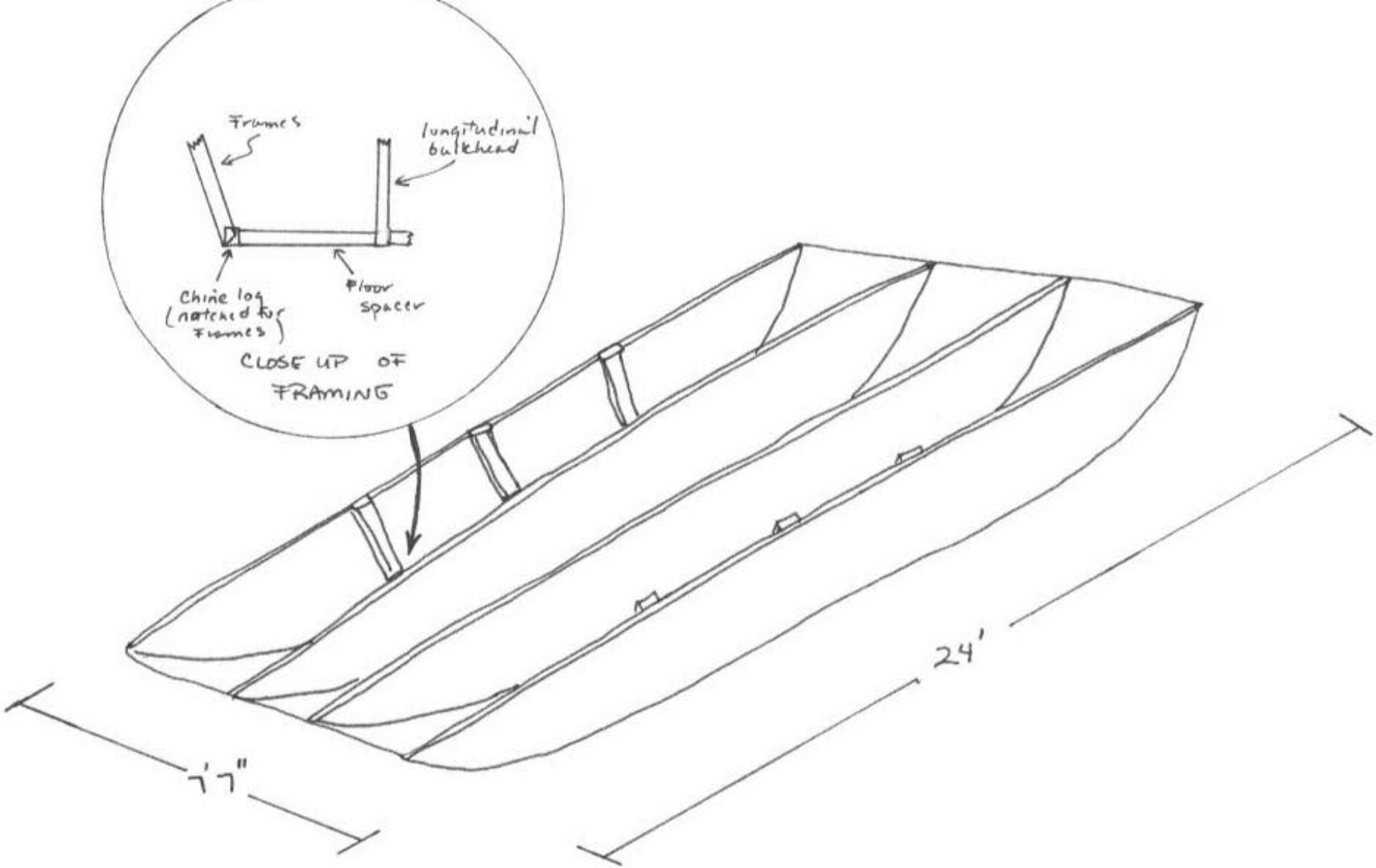

Figure 5. Sketch of 0001SAR, Avoca Flat Boat
LSB 5/12/86

Photo 1. Portion of Hull from Avoca Flat Boat, 0001SAR

Photo 2. Side Plank from Avoca Flat Bcat, 0001SAR

Avoca Shipyard Wreck, 0003SAR - The remains of this vessel lie as if abandoned in what appears to be the slipway of a shipyard shown on the Churton Plan 1767. Only the bottom of the hull and an average of six inches of the frames remained intact. Much of the vessel's stern features (i.e., rudder, stern post) were disarticulated but remained on the site (Figure 6, photo 3; Figure 7, photo 4). Approximately half of the foward portion of the vessel was buried in the sand along the shore. Probing to determine the extent of the wreck was confusing due to the presence of roots and large organic debris in the same strata; best estimates are that it continued at least twenty feet shoreward of the waters edge and lay beneath six to twenty-four inches of sediment (Figure 8, photo 5).

Wreck Facts

Hull - length - ca. 50', beam - 16½".

Centerboard box - length - >7½'; width - 12"; slot - 4"; height - 8".

Rudder - ½ circle shape; height - 2'7"; length - 1 1/8"; 2" thick; composed of wood boards fastened with three iron bolts with nuts.

Frames - 7½" sided; 4½" molded; on 2' centers.

Keelson - 4½" wide; 12" high; notched to fit over floor.

Williford Landing Punts, 0004SAR - Diving investigations located a concentration of cut logs and organic debris lying over soft sediments. While no small artifacts suggestive of a landing were found, pieces of at least three different disarticulated punts (small, lightly built, flat bottom boats) were located. Several side pieces and a bottom piece were brought up, examined, measured and placed back on the site (see Figure 9).

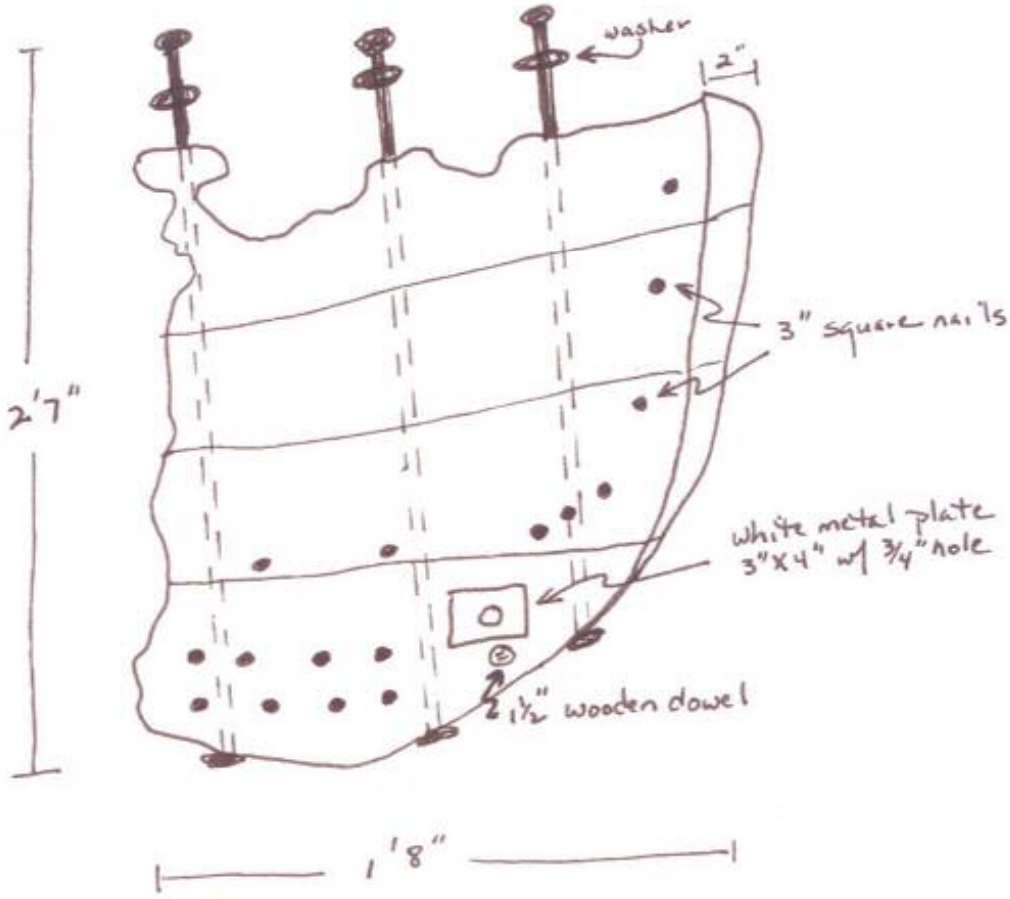

Figure 6, photo 3. Photograph and Sketch Rudder, 0003SAR, Avoca Shipyard Wreck. MWR/WS 5/14/86

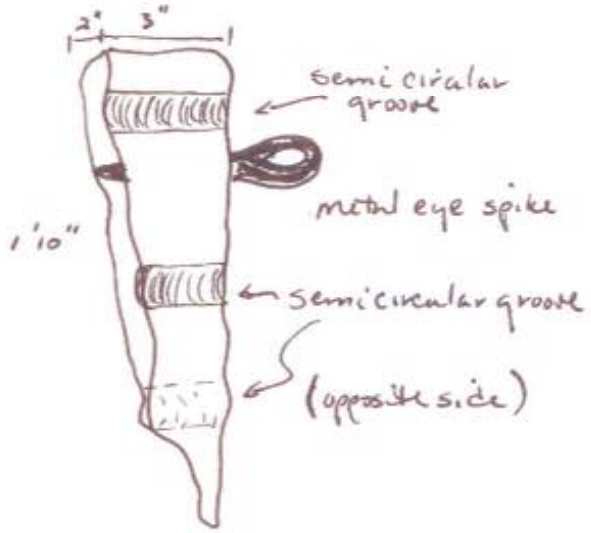

Figure 7, photo 4. Photograph and Sketch, Stern Timber, 0003SAR, Avoca Shipyard Wreck. MWR/WS 8/14/86

Figure 8, photo 5. Photograph and site plan, 0003SAR, Avoca Shipyard Wreck. MWR/WS 5/14/86

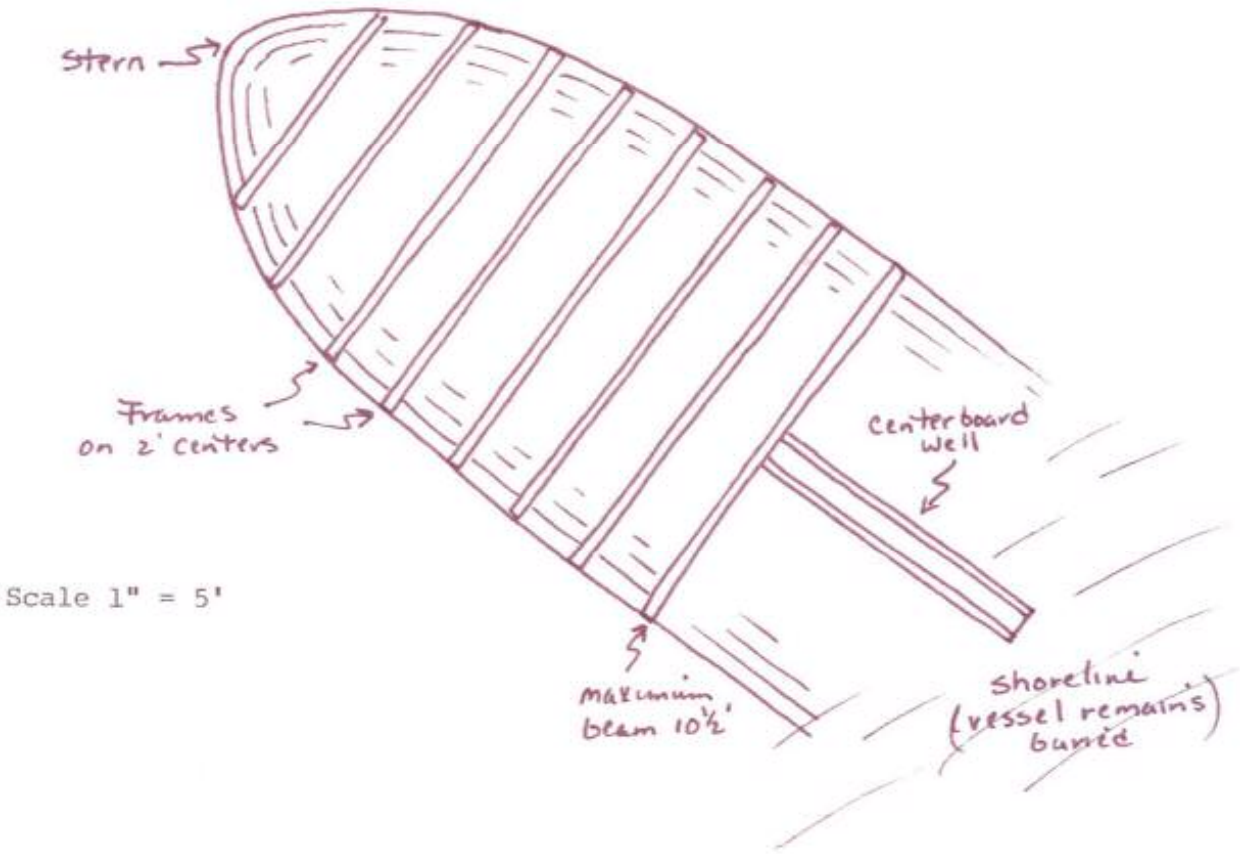

Scale 1" = 5'

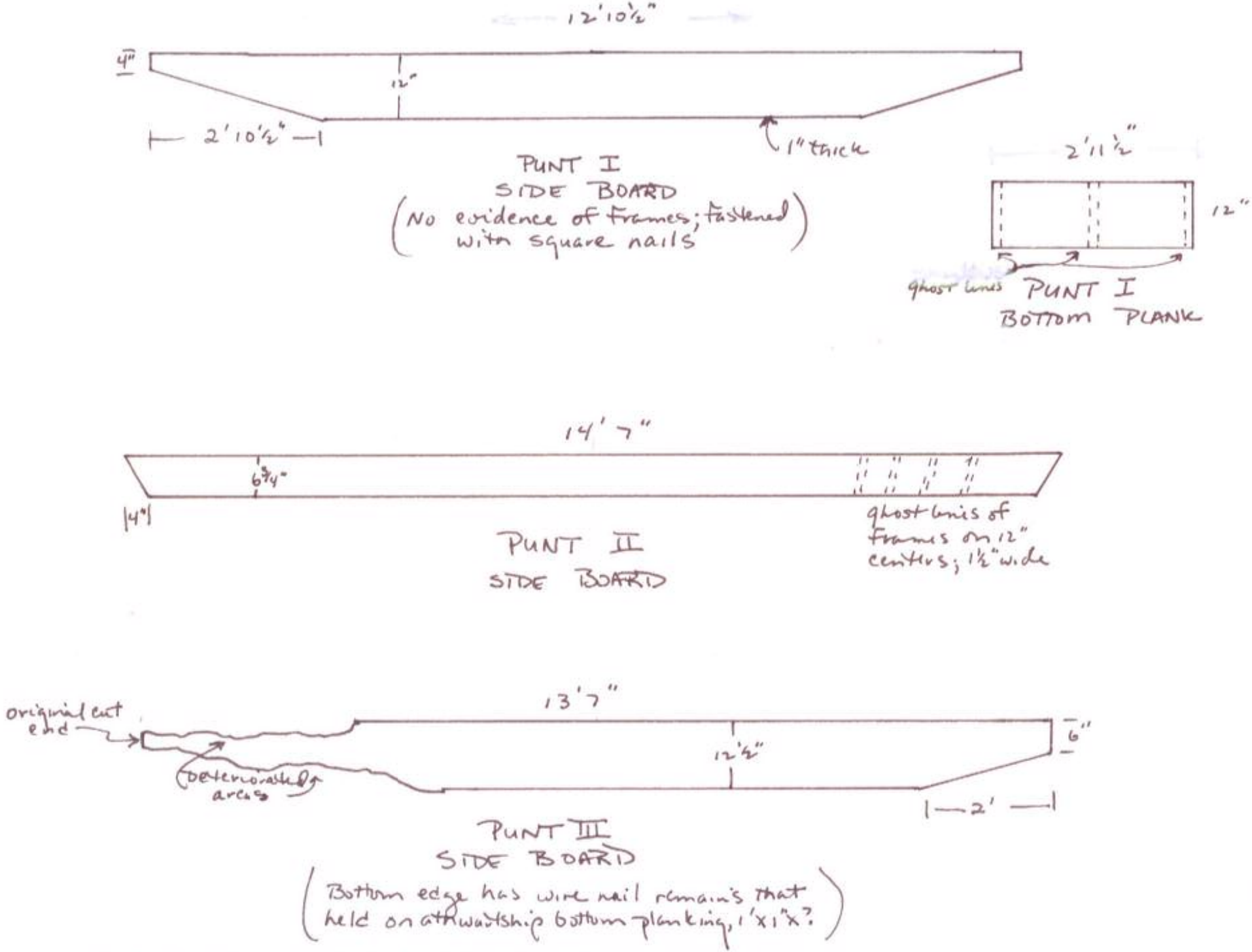

Figure 9. Sketch of 0004SAR, Williford Landing Punts, RWL 5/12/86

The punts averaged thirteen feet in length with a three-foot beam. They had square, raked ends of varying styles. Most likely they were cross-planked on the bottoms and had occassional framing boards to strengthen the sides and bottoms.

The site appears to have served as a lumber landing judging from the many cut logs that lay on the bottom. The punts, of which there are probably at least a half dozen, were used in support of an active logging industry, in which logs were rafted and pulled by tugboats (oral account, T. Bud Smythwick). This is an excellent place to study these types of water craft since they are well-preserved and can be easily brought to the surface for examination.

Willis Freight Line Wrecks, 0005SAR, 0006SAR, 0007SAR and 0008SAR- The exposed remain's of four large vessels (approximately 50' in length) were located with Mr. Smythwick's assistance at a landing approximately two miles above Avoca (Figure 4). Mr. Smythwick said that this was the main landing on Salmon Creek during the early twentieth century. It was here that boats such as SWANANOA, a passenger and mail carrier, B.J. and B.C., freight boats, and TRAMP, a gas launch would pick up respective cargoes headed for Edenton and other ports on the Albemarle Sound and Chowan River. These vessels were part of the Willis Freight line which was active until the highway bridge was built in 1928. Smythwick also mentioned that a salvor had removed most of the metal from the wrecks for scrap.

A few basic measurements were recorded for 0005SAR, which was partially exposed (Figure 10, photo 6). The other three vessels were laying just beneath the water; no observations were made other than

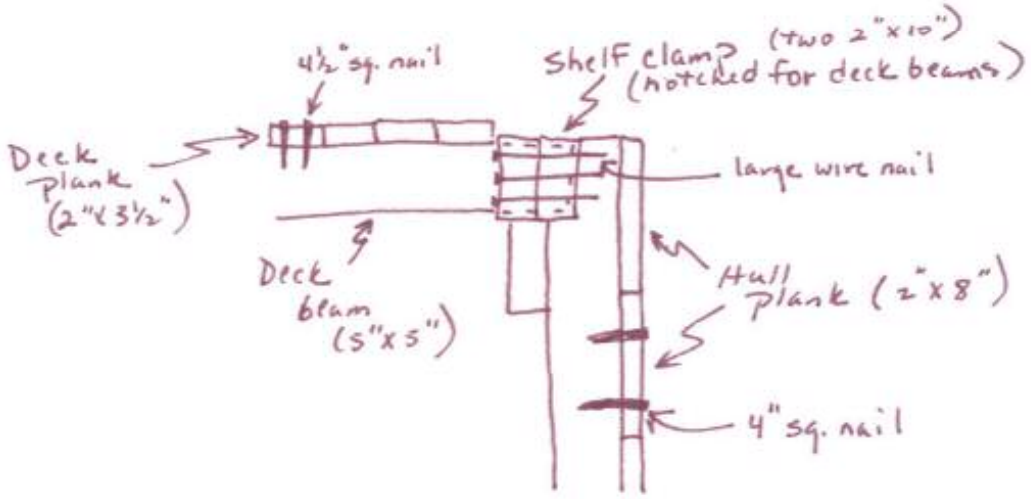

Figure 10, photo 6. Photograph and Upper Hull Detail Sketch, 0005SAR Willis Freight Boat. RWL 5/13/86.

their general location. Sample fastenings were recovered from 0005SAR and 0006SAR.

Wreck Facts for 0005SAR

Vessel Size - approximately 50' long; 10' beam.

Hull planking - 8" by 2" attached to frames with 4" square spikes.

Frames - 3½" by 4" placed on 28" centers; notched at top to accept shelf clamp.

Shelf clamp - Two 2" by 10" planks attached to frames with large wire nails; notched to accept deck beams.

Deck beams - 5" by 5" on 24 " centers; beams rest on the shelf clamp.

Deck planks - 2" by 3½" boards attached to beams with 4½" nails; partially covered with asphault.

Peddlers Boat, 0010SAR - Informant Smythwick is also responsible for our locating the remains of a vessel between Avoca Farms and the mouth of Salmon Creek. The vessel is reported to have been used by a mercantile trader who visited the area. On one of his visits, possibly over 100 years ago, he died and his vessel was left at its mooring and later sank.

A search of the general area was facilitated by a stake positioned near the wreck apparently there to warn fishermen of the submerged hazard. The vessel's lower hull was found preserved below the turn of the bilge. Sediment deposition was moderate covering six to eight inches in the bottom of the hold. A sketch of the two-masted, center-board, wooden vessel records some basic wreck details (Figure 11).

Avoca Steam Flat, 0015SAR - The remains of a steam flat were briefly examined after Mr. Smythwick pointed it out at Wiley's

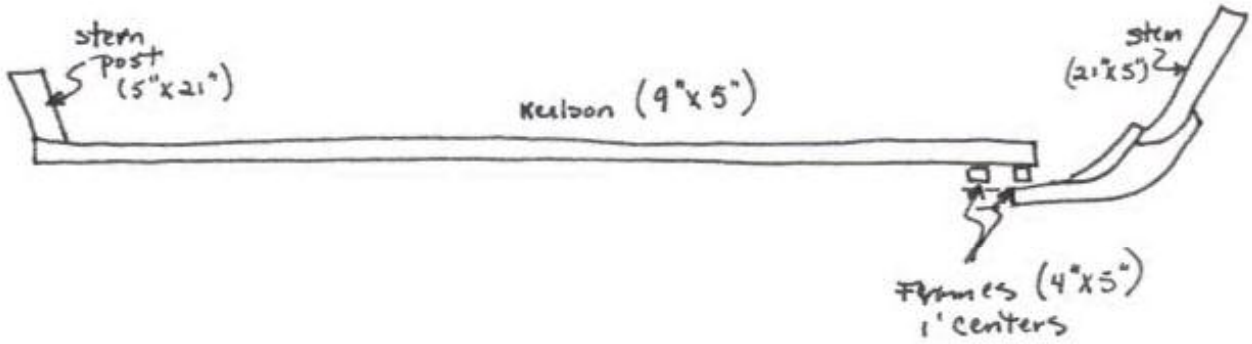

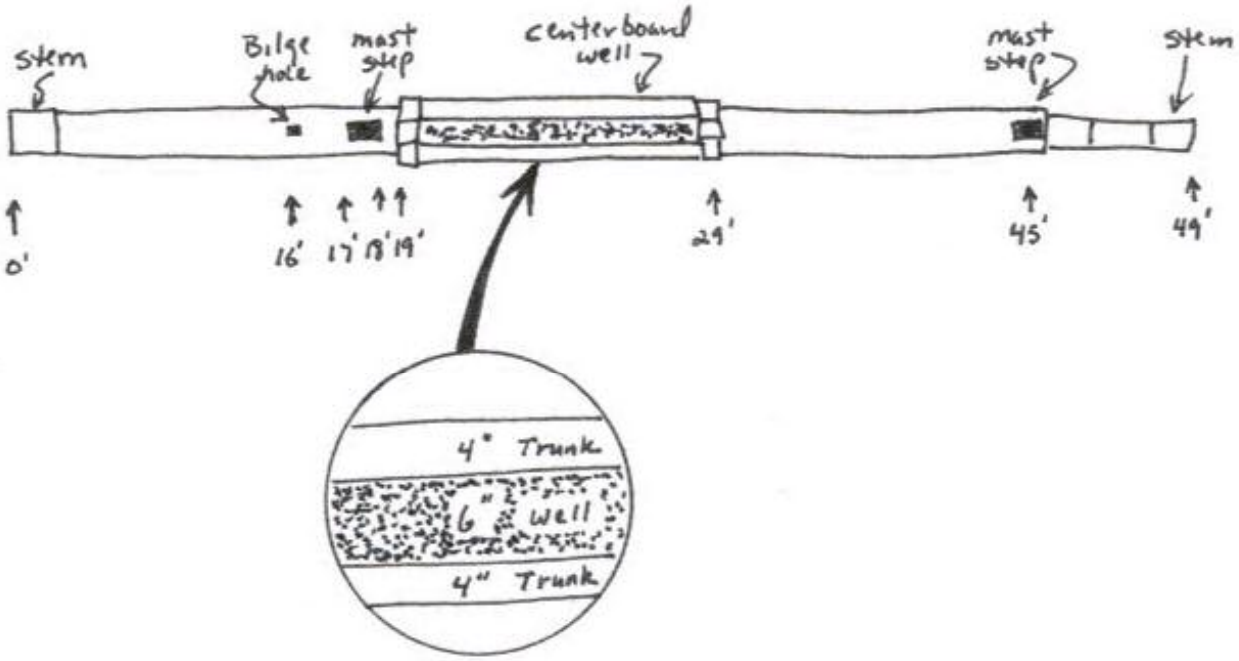

Figure 11. Sketch of 0010SAR, Peddler Boat, RWL 5/14/86.

Landing. He reported that the steam barges (flats) used in the sound fishing business, were pulled up at that site and abandoned when gasoline powered vessels became prevalent.

The remains of the side paddle wheel vessel consisted of the braces for the paddle wheel shaft with bearings which rested on a heavily deteriorated hull. The rest of the machinery has been removed from the site.

LANDING SITES

Wileys Landing, 0002SAR - This area located on a small point on the upstream portion of the Avoca complex is a promising place for a landing. It consists of high ground which slopes steeply to the river bottom at fifteen feet below water level. This would allow deep draft vessels to pull right up to the shoreline.

The landing's heavy usage is confirmed by the thick layering of ballast and brick on the bottom. Turn-of-the-century artifacts, such as ironstone plates and cut glass, were prevalent on top of the bottom rubble. Earlier materials may underlie the recent materials since a house (Wiley's) is recorded on the Churton Plat 1767.

Willifords Landing, 0004SAR - See description under section on Vessels, page 24.

Tombstone Landing, 0009SAR - A swim search of the point area, located a fifty-foot by forty-foot oval pile of ballast on the western side. Old bricks, coral and wooden timbers (function unknown) were also part of the cultural debris.

Today the upland is quite low and swampy and not fit for a landing; however, it must have been better during the eighteenth century since the 1767 Churton map shows a road leading to the site. The remains at this side may represent a short duration of Colonial use and therefore lie relatively uncontaminated by more recent activities.

Old Bridge Landing, 0011SAR - No underwater investigation was conducted here, however, Mr. Smythwick, felt this was the most promising spot for submerged remains. On the uplands he reported that a house stood, which was the main plantation for the Salmon Creek area. Associated with it were a race track and hospital and at the landing was a bridge and stage depot which serviced the main road going north/south. Pilings for the bridge can be seen along the creek banks.

The period of the primary activity at this site was during the nineteenth century based on map research.

Batts Point Transhipment Site, 0013SAR - Located at the confluence of Salmon Creek and the Albemarle Sound, Mr. Smythwick reports that a large platform/warehouse was constructed there for the purpose of offloading goods from large boats onto smaller ones for distribution up Salmon Creek. Several large support pilings arranged in a triangular shape are still exposed. No underwater investigations were conducted here.

RECOMMENDATIONS

The brief reconnaissance of Salmon Creek as reported here provides ample reasons to return to the area for a more comprehensive search, as well as, a more in depth look at recorded sites. A magnetometer survey and anomaly site assessment would undoubtedly locate additional cultural material to add to the present data base, particularily older materials that predate informant memory.

Since Salmon Creek is relatively short a comprehensive survey could be conducted rather easily and effectively. Active use of Salmon Creek from the very earliest European colonization of North Carolina to the early twentieth century make it an ideal area to explore for submerged archaeological remains. These remains could provide great returns toward reaching a better understanding of the historic use of Salmon Creek and similar waterways. Indigenous and intrusive water craft types, selection of landing spots and vessel abandoning practises are a few areas of study that might benefit from additional archaeological work conducted in Salmon Creek.

APPENDIX A

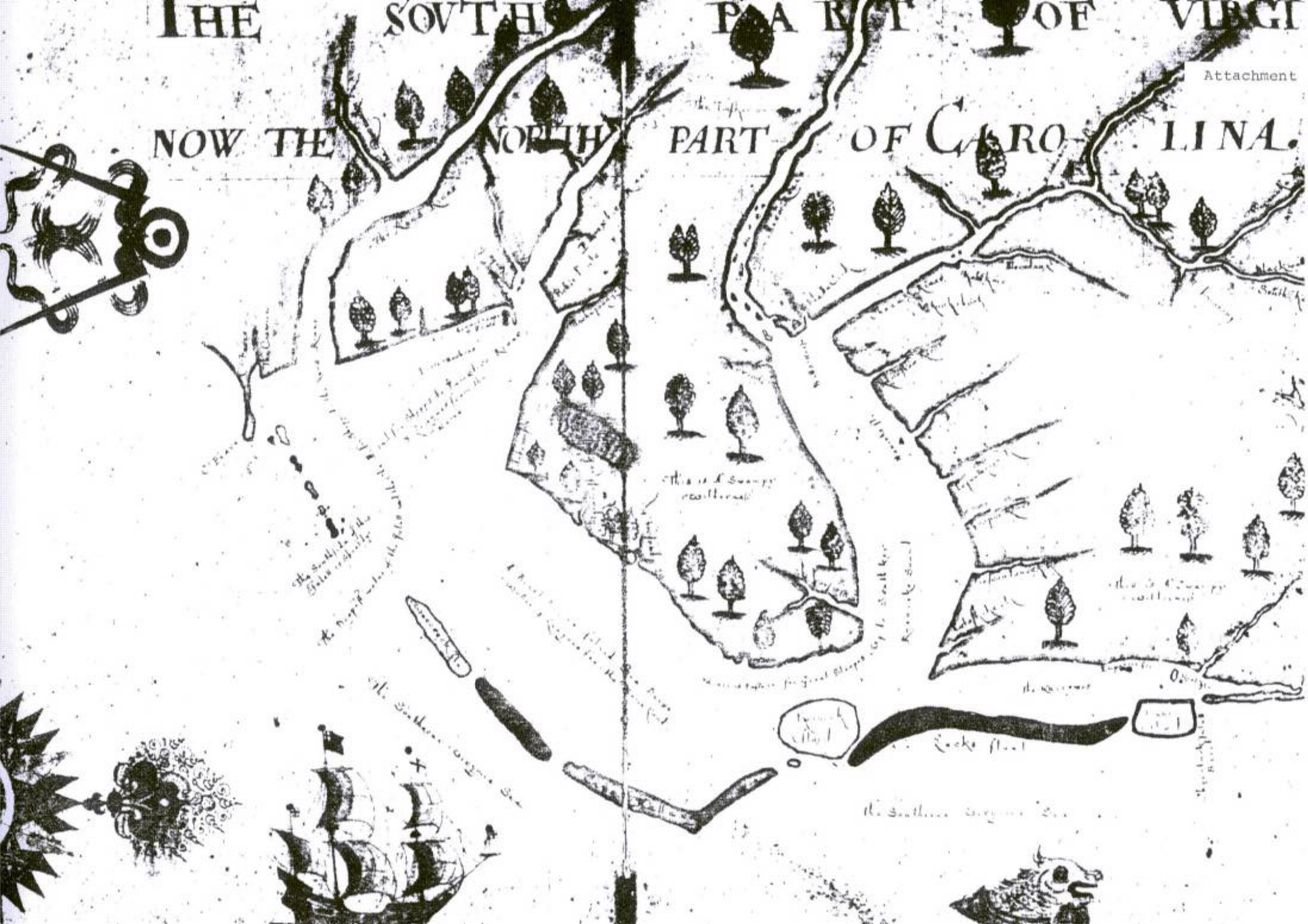
THE SOVTH PART OF VIRGI
NOW THE NORTH PART OF CARO LINA.

Attachment B

Churton Plat 1767

A Plan of a Tract of Land belonging to Esq.r Duckenfield, Lying between Salmon Creek & Kathy River & Bounded on the East, by Albemarle Sound, and on both sides of Black-Walnutt Swamp, Beginning at a Reed. Oak the head of Poplar Run, a Branch of Salmon Creek and by the Main Country Road, And Runing thence to the Head of another Branch and down the said Branch to the Mouth of Salmon Creek. So down the Various Courses of the said Creek to the Sound so Round, Binding on the Sound to Andrew Burns line, formerly Capt. David Henderson's, then along Burns line to Black-Walnutt Swamp, then Crossing the Swamp to Perry's line, then along Mr. Rutherford's line, then along Mr. Hardy's head line to his Corner, then again along his line to the Beginning &c. See Plan.

Resurveyed 22d. Augt 1767.

W. Churton

Explanation

That part of the Land Mark't A & Bounded by Black Walnutt Swamp	Acres 1885
That part of the Land Mark't B. lying on the South side the said Swamp & Bounded by Mr Lockhart Line Mark't thus &c	1258
	c 3143
The Lands now Claimed Mark't C. by Mrs Lockharts, Jacock & Bryants Bounded on the South side the said Swamp & the Line Mark't thus &c	1315
The Land Mark't D (they suppose it, but I doubt it) sold out of the Duckenfield Land	200
The Land now belonging to Mr Jacock Mark't E	90

The Black lines Claimed by the different Naghbours Mark't thus &c

The Red lines taken from the late Patent of Plan'd from the Hicory the only Corner now standing (if the Right Tree) All within the Prick't line, are either Old Field or Cleard Land.

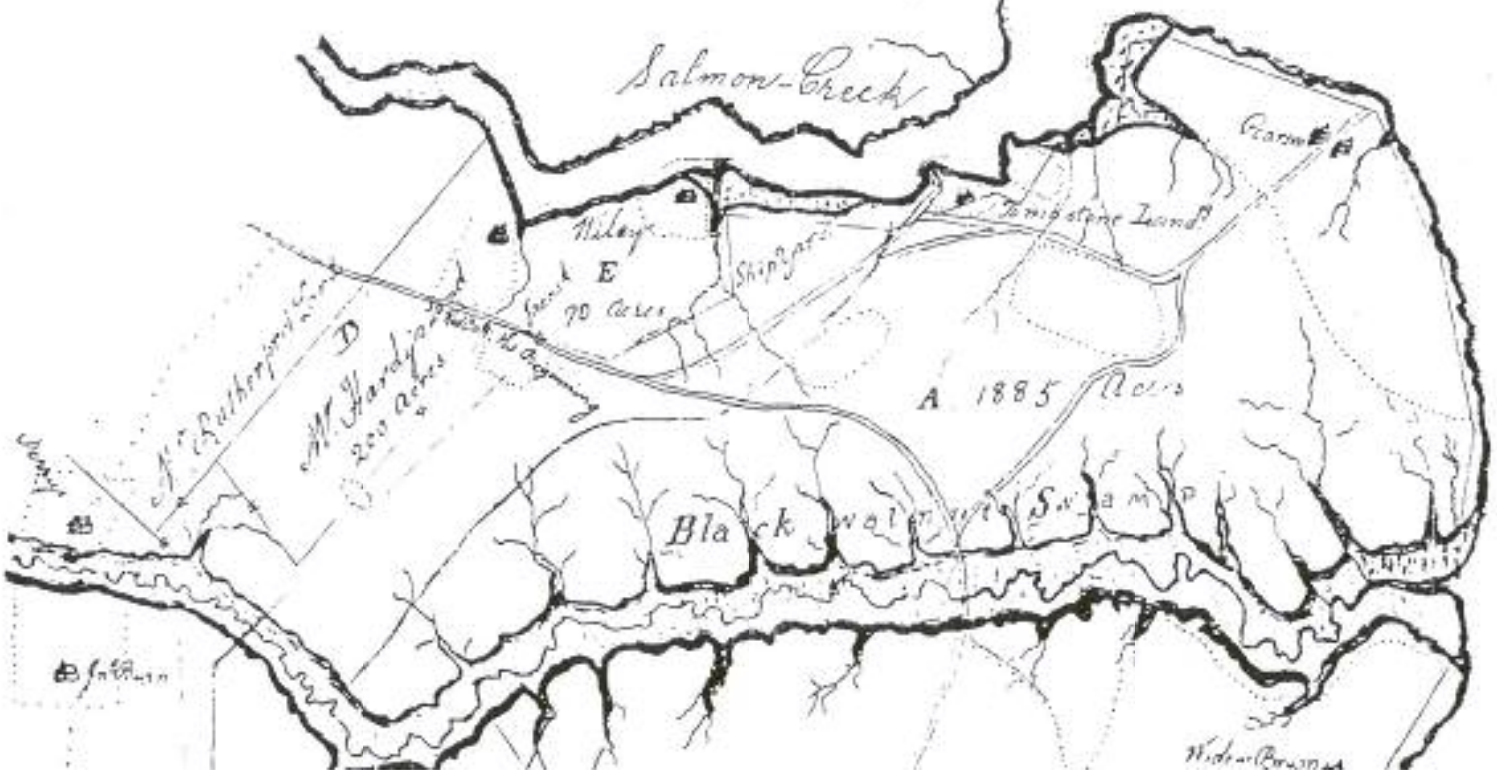

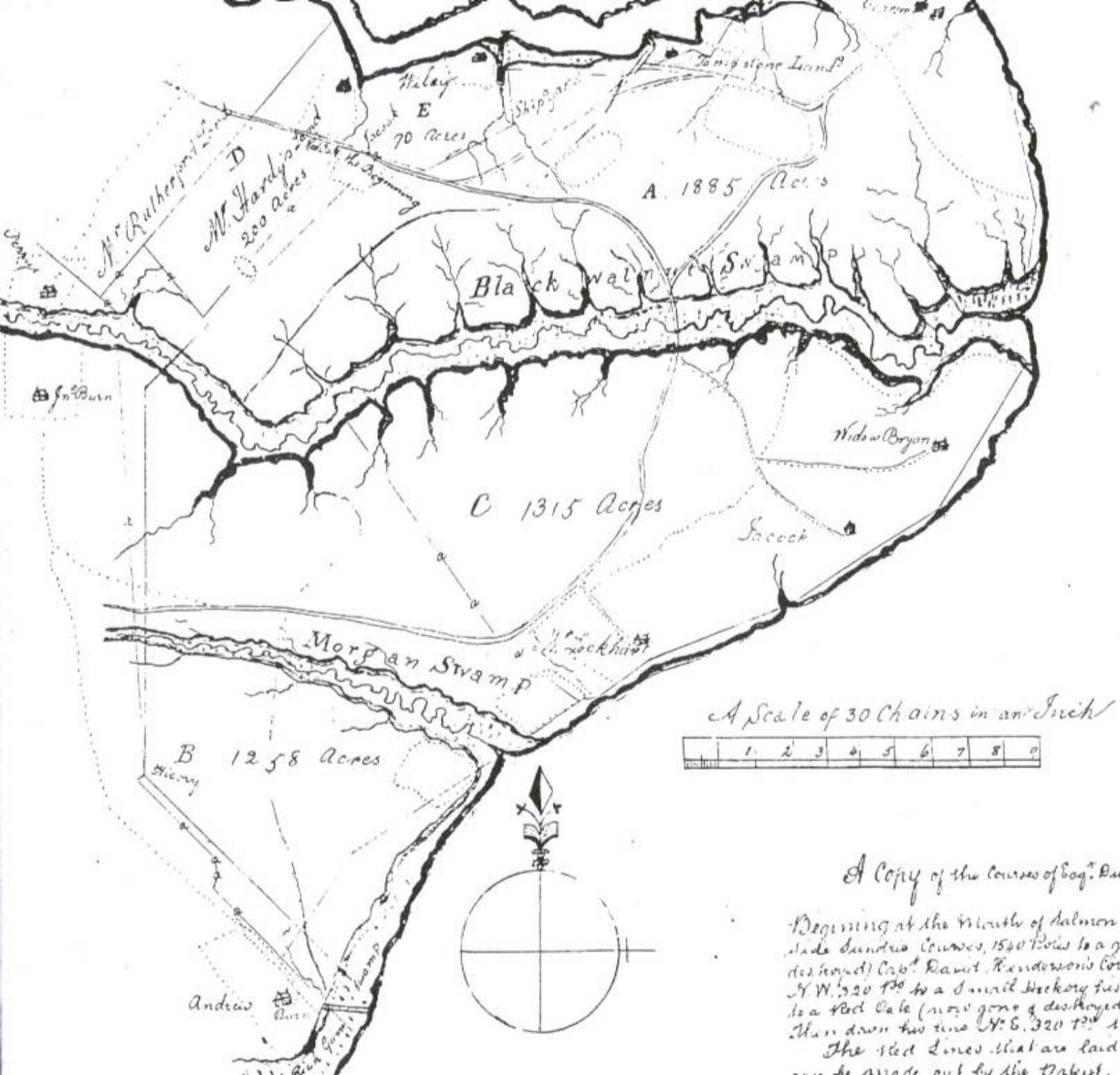

A Copy of the Courses of Esqr. Duckenfield's Lattest Patents

Beginning at the Mouth of Salmon Creek & along the Sound Side Sundrie Courses, 1540 Poles to a great Beech (Now gone and destroyed) Capt. David Henderson's Corner, then up his Line, N.W. 320 Po to a Small Hickory his Corner, then No 435 Po to a Red Oak (now gone & destroyed) Richd Grilles Corner, then down his Line No E. 320 Po to the first Station.

The Red Lines that are laid down in the plan, are as far as can be made out by the Patent.

APPENDIX B

ARTIFACT INVENTORY

0003SAR

Treenail - 4" long, 1" diameter, square wedge

Iron rods - 18" long, ½" stock
9½" long, ½" stock, one end hammering evidence

Spikes - (3) 4" long, 3/8" square wrought boat spikes

Nails - 16d common cut nail
10d wire nail

0005SAR

Nails - 20d common cut nail
30d common cut nail
60d common wire nail

0006SAR

Spikes - (3) 6" long, 3/8" square cast, galvanized boat spikes

0010SAR

Bottle - 30 oz (embossed) clear, spirits bottle, Ownes machine made, heavy sand etching on shoulders and lip

Pipe - Lead bilge pipe with square wood sleave; 8" long, 3" outer diameter; 2½" inner diameter

Wood - Floorframe - edar
Outer hull planking - yellow pine